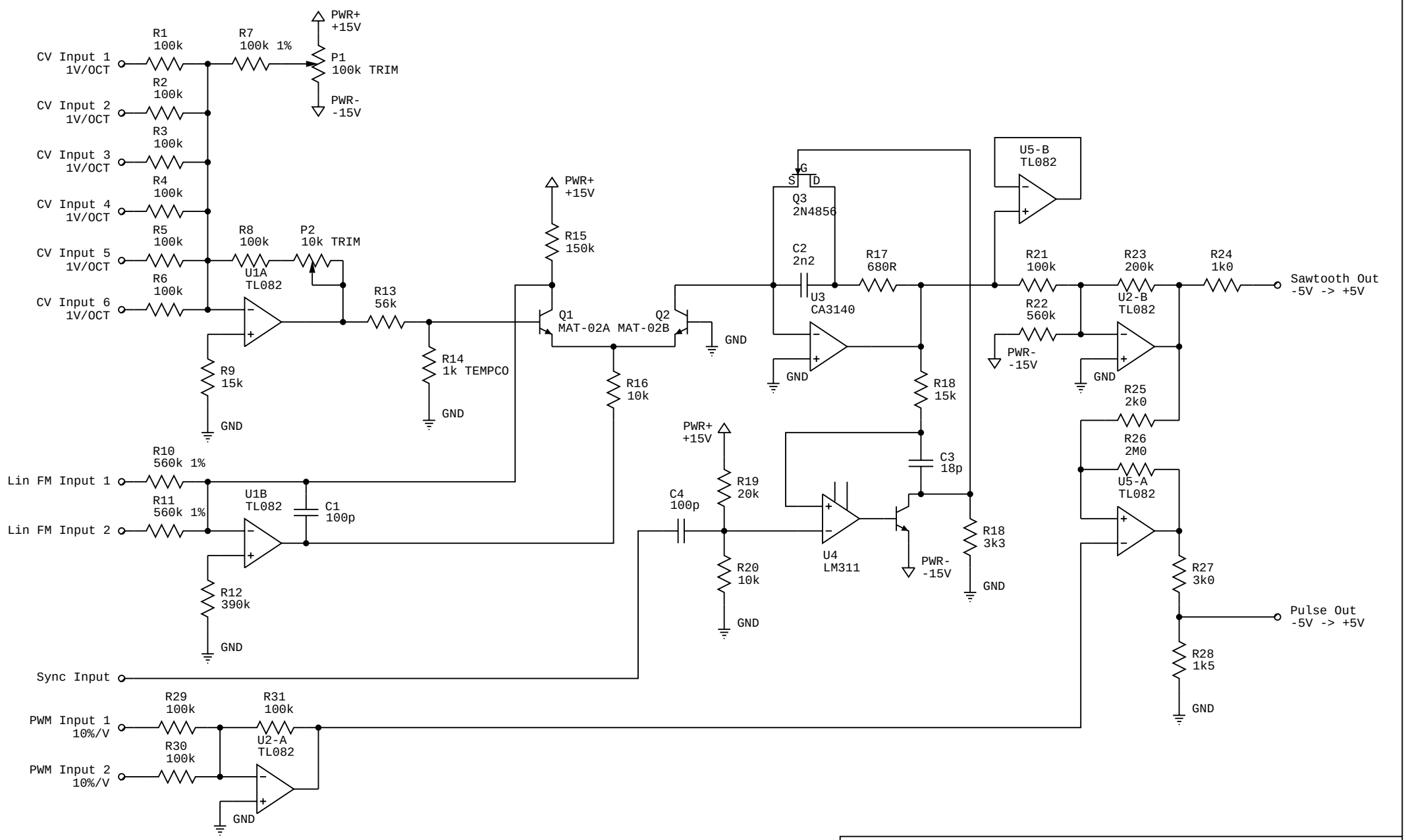

Title		
ASM-1 VCO (1 of 2) V1.1		
Date: 2003-08-22	Editor(s): G. Stopp and M. Danielson	Page: 1 of 7